Inductive Proximity Sensors

M36 | 20mm | NPN | NO | 300mA | 3 Wire

Ordering Code: D30C-3620-NM-3

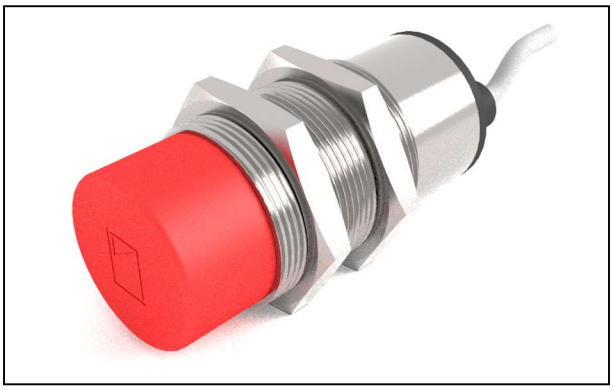

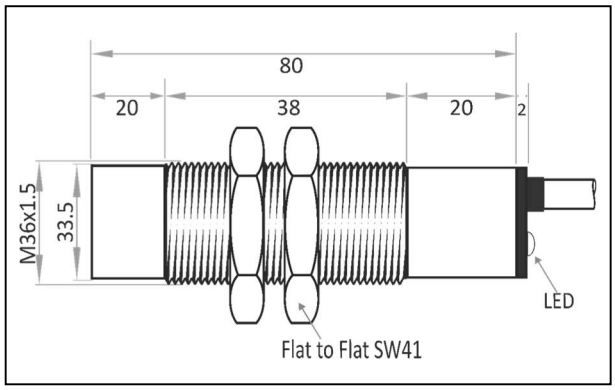

Technical Specifications	
Cylindrical Metal Housing Diameter/Pitch (mm)	M36 / 1.5
Installation	Non-Flush
Rated Operating Distance (Sn)	20 mm
Actual Sensing Distance (Sa)	16.20 mm
Minimum Target size (min)	60 x 60 x 1 mm
Repeat Accuracy	≤ 10% mm
Hysteresis	≤ 15% of Sn
Operating Voltage	10 - 30 V DC
Residual Ripple (at operating Voltage)	≤ 10 %
Output Circuit Type	NPN NO
Max. Load Current (On state)	≤ 300 mA
Current Consumption (No Load)	< 13mA
Residual Current	< 0.6 mA
Switching Frequency	500 Hz
O/P status Indicator	Red LED
Voltage Drop	≤ 2.5V
Correction factor - Brass / Al	0.5 / 0.4
Operating Temperature Range	-10°C to 70°C
Temperature Drift	≤ 10% of Sn
Over load & Short circuit Protection	No
Reverse Polarity Protection	Yes
Environmental Protection	IP67
Rated Insulation Voltage	≤ 0.5 KV
Dielectric strength	1000VAC @ 50Hz – 1 min
Vibration resistance	10Hz – 55Hz, 1mm in X, Y & Z axis for 30 mins each
Shock resistance	30g for 1ms in X, Y & Z axis for 6 mins each
Insulation Class	⧈
Housing Material	Nickel Plated Brass

Electrical Connections	
Termination	2 meter Prewired 3-Core PVC Cable (3 x 0.44mm²)

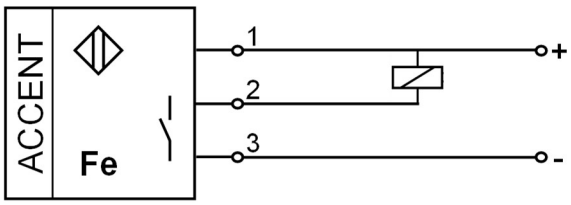

Wire Colour Coding:

1. RED : +
2. GREEN : Output
3. BLACK : -

ACCENT CONTROLS

H.O.: Accent Controls - 3rd Floor, Karma Stambh Industrial Estate, L.B.S. Marg., Vikhroli West, Mumbai - 400 083, Maharashtra, India.
URL: www.accentsensors.com email: info@accentsensors.com